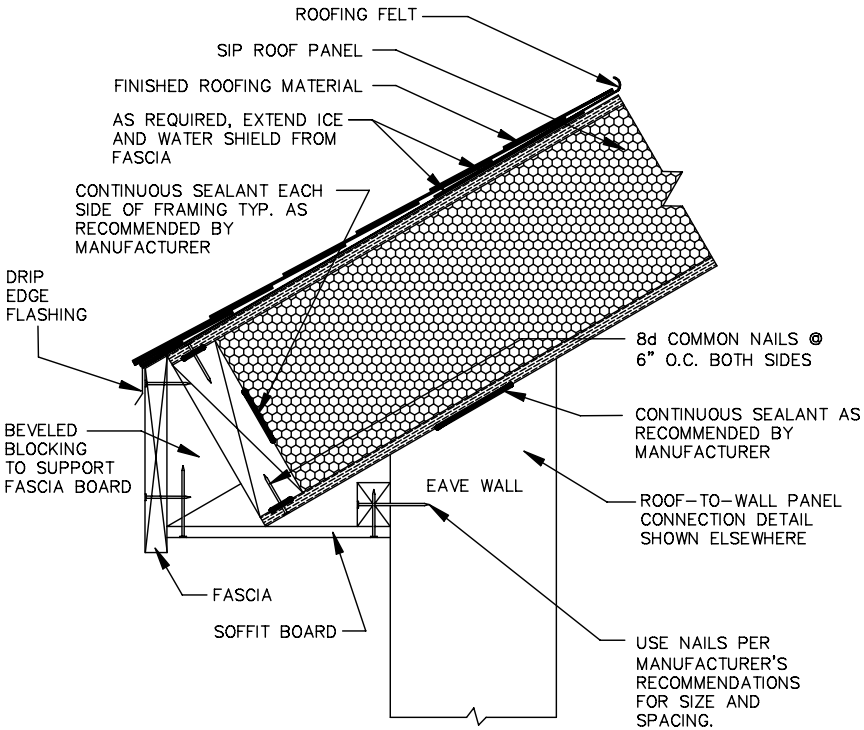

EAVES DETAILING

EAVES DETAIL D